BIOPAC Systems, Inc. RESEARCH
Registered to ISO 9001:2000
42 Aero Camino, Goleta, CA 93117
Tel (805) 685-0066 | Fax (805) 685-0067
info@biopac.com | www.biopac.com

MRI Applications

	TRANSDUCERS	FILTERS		CABLES						
CABLE/FILTER SYSTEMS	**Transducers**	**MRIRFIF**	**MRIRFIF-2**	**MECMRI-1**	**MECMRI-2**	**MECMRI-3**	**MECMRI-4**	**MECMRI-5**	**MECMRI-6**	**MECMRI-OXY**
MECMRI-BIOP Connect electrodes to the subject in the MRI chamber and then to a biopotential amplifier in the control room.	ECG100C EEG100C EGG100C EMG100C EOG100C ERS100C	X	X	X	X					
MECMRI-TRANS Connect electrodes to the subject in the MRI chamber and then to a transducer amplifier in the control room.	GSR100C RSP100C SKT100C	X	X	X		X				
MECMRI-DA Connect directly to -MRI transducers in the MRI chamber with the DA100C in the control room.	TSD104A-MRI TSD117-MRI TSD121B-MRI	X	X					X		
MECMRI-HLT Connect directly to -MRI transducers in the MRI chamber with the HLT100C in the control room.	TSD115-MRI TSD131-MRI	X	X						X	
MECMRI-OXY Connect directly to TSD123A/B Pulse Oximetry transducers in the MRI chamber with the OXY100C in the control room.	OXY100C		X							X
MECMRI-STMISO Connect to STMISO and STM100C in the MRI control room.	STIMISOC/D/E to STM100C	X	X	X			X			
No Cable/Filter Sys. required Use AFT30XL tubing and a transducer in the MRI chamber and connect to the TSD160A and DA100C in the control room.	TSD110-MRI TSD114-MRI									

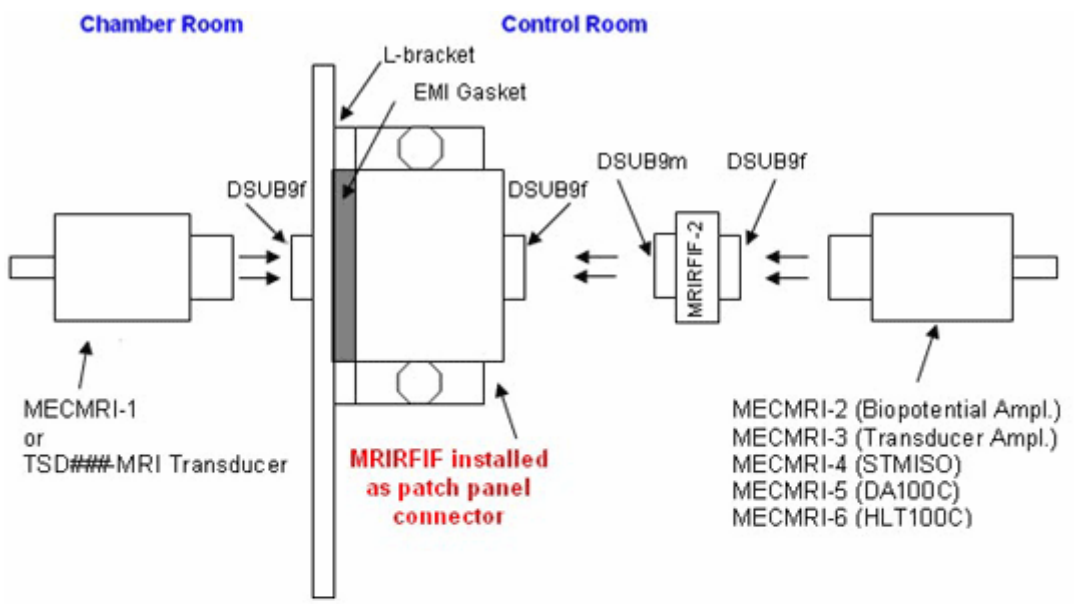
Chamber Room
Control Room
L-bracket
EMI Gasket
DSUB9f
DSUB9f
DSUB9m
DSUB9f
MRIRFIF-2
MECMRI-1
or
TSD###-MRI Transducer
MRIRFIF installed
as patch panel
connector
MECMRI-2 (Biopotential Ampl.)
MECMRI-3 (Transducer Ampl.)
MECMRI-4 (STMISO)
MECMRI-5 (DA100C)
MECMRI-6 (HLT100C)

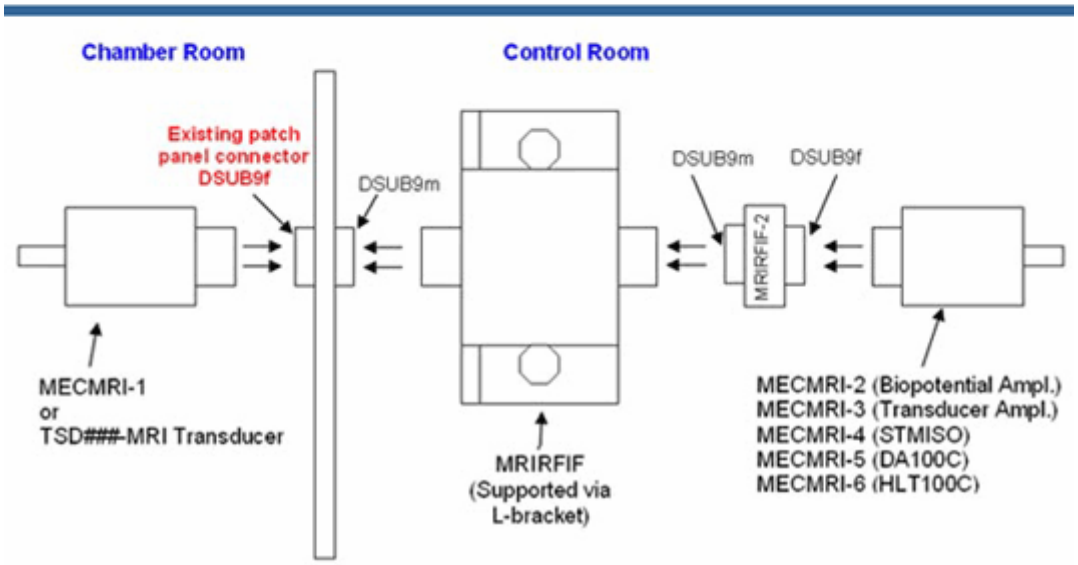
Chamber Room
Control Room
Existing patch
panel connector
DSUB9f
DSUB9m
DSUB9m
DSUB9f
MRIRFIF-2
MECMRI-1
or
TSD###-MRI Transducer
MRIRFIF
(Supported via
L-bracket)
MECMRI-2 (Biopotential Ampl.)
MECMRI-3 (Transducer Ampl.)
MECMRI-4 (STMISO)
MECMRI-5 (DA100C)
MECMRI-6 (HLT100C)

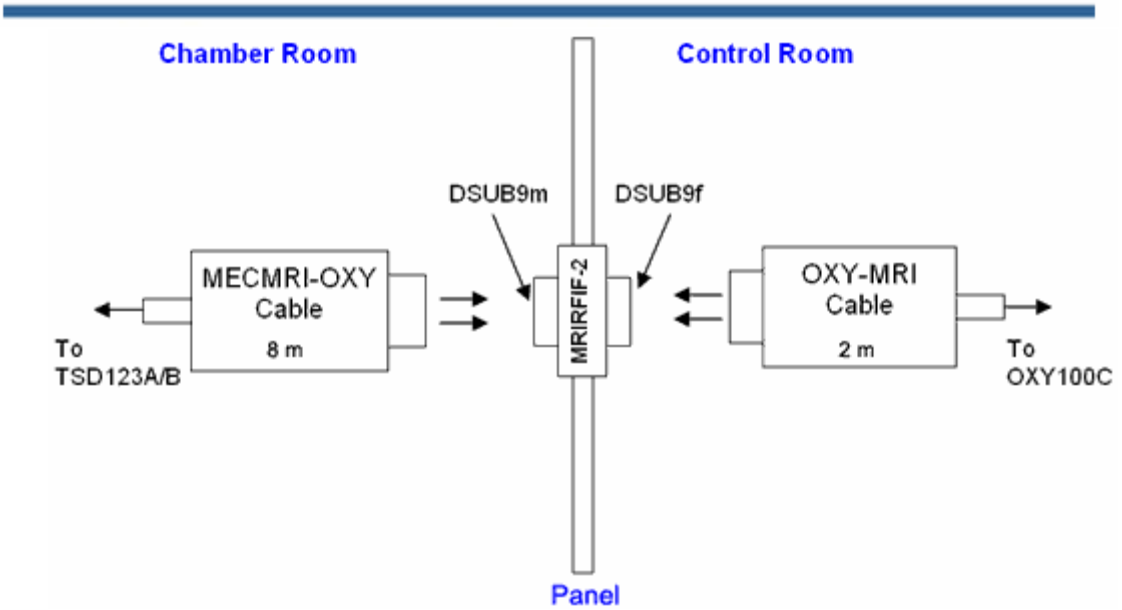
Chamber Room
Control Room
DSUB9m
DSUB9f
MECMRI-OXY
Cable
8 m
MRIRFIF-2
OXY-MRI
Cable
2 m
To
TSD123A/B
To
OXY100C
Panel