INTERFACE MODULES

HLT100C UIM100C

When connecting the analog output sourcing from external devices to the MP160 or MP150, channel contention must be considered. To connect external device outputs to the MP160 or MP150:

- **Non-human subjects or only collecting data from external devices**ð If the MP System is only collecting signals from non-human subjects (via MP system amplifier modules) or if the MP System is only collecting data from external devices:
  - Connect external device output signal to an unused **UIM100C** input channel (1-16)
- **Human subjects**ð If the MP System is collecting signals from human subjects (via MP system amplifier modules), it's important to isolate the external device output signal from the MP System input.
  - Connect external device output signal to an unused **HLT100C** input channel (1-16) via **INISO**.

Channel contention issues

1. If an analog channel is used on the UIM100C or HLT100C, make certain that two external devices do not use the same analog channel.
2. If amplifier modules are connected to the MP System then those amplifier modules must be set to a channel which is not used by external devices plugged into the UIM100C or HLT100C.

For example:

Two external device outputs are connected to the MP160/150 system. Device one is a Noninvasive Blood Pressure (NIBP) monitor and device two is an Electronic Scale. In addition, an ECG100C module is attached to the MP160/150 System and is being used to measure the electrocardiogram. All devices are connected to a human subject.

In this case, to fully isolate the human subject:

- Both the NIBP monitor and the Electronic scale outputs should be connected to the MP160/150 inputs via the HLT100C, using one INISO for each input channel.
- The ECG100C should be snapped directly to the MP160/150 System and connected directly to the subject with the appropriate leads and electrodes.
- Assuming the NIBP is connected via INISO to HLT100C channel 1 and the Electronic Scale is connected via INISO to HLT100C channel 2, then the ECG100C amplifier must be set to a channel between 3-16.
  - The ECG100C canô t use Channels 1 and 2 because both of these channels are being used by other devices.

If additional instruction or a special cable is required to connect the MP System to the device, please contact a BIOPAC Systems, Inc. applications engineer at support@biopac.com.

info@biopac.com
support@biopac.com
www.biopac.com

UIM100C UNIVERSAL INTERFACE MODULE

The UIM100C Universal Interface Module is the interface between the MP150* and external devices. Typically, the UIM100C is used to input pre-amplified signals (usually greater than +/– 0.1 volt peak-peak) and/or digital signals to the MP150 acquisition unit. Other signals (e.g., those from electrodes or transducers) connect to various signal-conditioning modules.

***The UIM100C is for MP150 hardware only**. For interfacing newer MP160 hardware, use the HLT100C High Level Transducer Module.

The Universal Interface Module (UIM100C) is designed to serve as a general-purpose interface to most types of laboratory equipment. The UIM100C consists of sixteen 3.5 mm mini-phone jack connectors for analog inputs, two 3.5 mm mini-phone jack connectors for analog outputs, and screw terminals for the 16 digital lines, external trigger, and supply voltages.

The UIM100C is typically used alone to connect polygraph and chart recorder analog outputs to the MP System. BIOPAC Systems, Inc. offers a series of cables that permit the UIM100C to connect directly to a number of standard analog signal connectors. Most chart recorders or polygraphs have analog signal outputs, which can be connected directly to the UIM100C.

The UIM100C allows access to 16 analog inputs and 2 analog outputs on one side, and 16 digital input/output lines, an external trigger, and supply voltages on the other side. The UIM100C is designed to be compatible with a variety of different input devices, including the BIOPAC series of signal conditioning amplifiers (such as the ECG100C).

Connecting the UIM100C to the MP System

- MP150: Snap the UIM100C onto the right side of the MP unit.

When using the Universal Interface Module (UIM100C) with other 100C-Series modules, the UIM100C is usually the first module cascaded in the chain. If using the STM100C, OXY100C or HLT100C, the module must be plugged in on the **left** of the UIM100C. Up to seventeen modules (including the UIM100C) can be snapped together, as illustrated in the following diagrams:

info@biopac.com
support@biopac.com
www.biopac.com

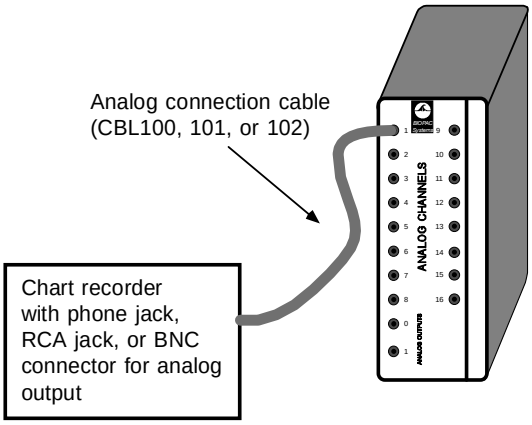

Typical UIM100C to polygraph interface

When using the UIM100C, be careful not to short the ñanalog outputò terminals together, and not to short across any of the connectors on the ñDigitalò (back) side of the module.

IMPORTANT USAGE NOTE

Mains powered external laboratory equipment should be connected to an MP System through signal isolators when the system also connects to electrodes attached to humans.

To couple external equipment to an MP System, use:

- For **analog** signals ð **INISO** or **OUTISO** isolator (with **HLT100C**)
- For **digital** signals ð **STP100C** (with **UIM100C**)

Contact BIOPAC for details.

ANALOG CONNECTIONS

See also: Setup notes for external devices and channel contention issues.

As noted, the UIM100C requires cables equipped with standard 3.5mm mini-phone plugs to connect to analog signal sources. This type of connector is commonly available with many different mating ends. BIOPAC Systems, Inc. carries several different types, including BNC and phone plugs. Since the MP160/150 analog inputs are single-ended, the tip of the mini-phone plug is the input and the base (shield) of the mini-phone plug is the ground (or common).

NOTE: Make sure the cable that is routed into the UIM100C is a **mono** 3.5 mm phone plug.

To connect to existing equipment (such as polygraphs or chart recorders), run a cable from the analog output terminal of the external device to the UIM100C. Since there are so many different devices that can connect to the MP160/150 itôs impossible to cover them all.

info@biopac.com
support@biopac.com
www.biopac.com

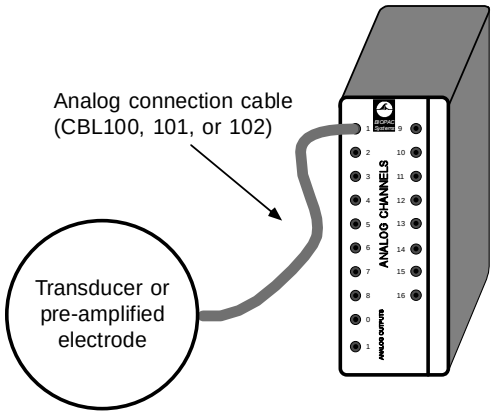

UIM100C connected to external analog signal source

DIGITAL CONNECTIONS

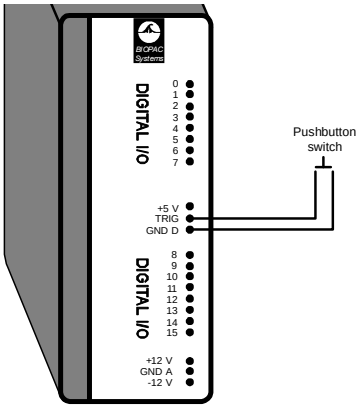

Trigger connected to UIM100C

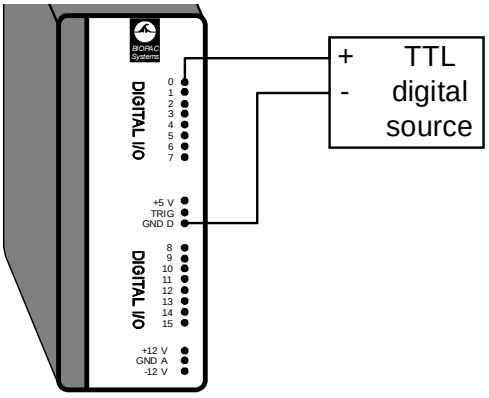

MP unit to digital source connection

A digital signal has only two voltage levels: 0 Volts = binary 0 and +5 volts = binary 1.

A **positive edge** is a 0 to 1 transition and a **negative edge** is a 1 to 0 transition.

The MP150 digital I/O lines have internal pull-up resistors so that unconnected inputs read ñ1.ò This means that external passive switches can be used to introduce digital (ON/OFF) data into the UIM100C by connecting the switch terminal between the digital I/O (0-15) and Ground (GND). In this configuration, the input will be read as ñ0.0ò when the switch is closed and as ñ+5 Vò when the switch is open.

The 16 digital input/output lines on the UIM100C have screw terminals that can accept pin plugs or bare wires, as shown above. Be careful not to short the +5, +12 V and –12 V terminals together or to the GND A or GND D output terminal, or the MP150 may become damaged.

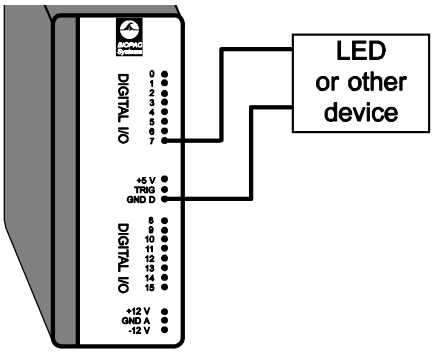

The 16 digital lines are divided into two blocks, I/O 0 through 7 and I/O 8 through 15. Each block can be programmed as either inputs or outputs. Do not connect a digital input source to a block that is programmed as an output.

info@biopac.com
support@biopac.com
www.biopac.com

Output devices (such as leads or an LED) can be connected to the digital side of the UIM100C. Outputs can be connected so that they are ñONò either when a signal output from the UIM100C reads 0 Volts or when a +5 V signal is being output.

- When connecting to an LED, be sure to use a current-limiting resistor (typically 330 Ω) in series with the LED.

To connect an LED so that it defaults to ñOFFò (i.e., the digital I/O reads 0), attach one lead of the output device to the GND D terminal on the UIM100C and connect the other lead to one of the digital I/O lines (I/O 7, for example). When configured this way, the device will be ñOFFò when I/O 7 reads 0, and ñONò when I/O 7 reads a digital ñ1ò (+5 Volts).

Alternatively, connect one of the device leads to the +5 V terminal on the UIM100C and leave the other lead connected to the digital line (e.g., I/O 7). With this setup, the device will be ñONò when the I/O line (in this case digital I/O 7) reads 0, and ñOFFò when the I/O reads a digital ñ1ò (+5 Volts).

UIM100C SPECIFICATIONS

Analog I/O:	16 channels (front panel) ï 3.5 mm phone jacks
D/A Outputs:	2 channels (front panel) ï 3.5 mm phone jacks
Digital I/O:	16 channels (back panel) ï screw terminals
External Trigger:	1 channel (back panel) ï screw terminal
Isolated Power:	±12 V, +5 V @ 100 ma (back panel) ï screw terminals
Weight:	520 g
Dimensions:	7 cm (wide) x 11 cm (deep) x 19 cm (high)